NOTES:

1. USE TERMS L1 & N FOR 115V 1PH(BK & WE WIRE)
   USE TERMS L1 & L2 FOR 208/230 1PH(BK WIRES)
   USE TERMS L1, L2, & L3 FOR 208/230/460 3PH(BK WIRES)
2. UL CLASS 'CC' CARTIDGE FUSE,
   TIME DELAY, 600VAC, 200KA I.R., 3 AMP
3. FOR 120V-1PH ONLY:
   A. COMBINE RD WIRE LABELED 1A INTO SPRING CAGE CONNECTOR W/ L1 WIRES FROM J-BOX AND VFD.
   B. COMBINE WE WIRE LABELED 2A INTO SPRING CAGE CONNECTOR W/ L2 WIRES FROM J-BOX AND VFD.
   C. TRANSFORMER GROUND IS NOT USED.
4.
5. FACTORY WIRED TO TERMINAL 5 FOR 0-10VDC.
   IF 4-20mA IS USED, CONNECT WIRE S3^BK TO TERM 25 AND CHANGE PARAMETER P-05 TO 04.
6. IF LOW WATER CUTOFF IS NOT USED, YW WIRE 6B IS CONNECTED FROM TERMINAL 6 TO WATER FLOW SWITCH TERMINAL (NO)
7. IF THE BURNER THERMAL FUSE IS NOT USED, CONNECT YW WIRE #54 FROM VESTIBULE THERMAL FUSE TO THE LOW GAS PRESSURE SWITCH C.
8. OPTION 1: GENERAL ALARM RELAY CAN BE USED WITH OPTION 2 WHEN SPECIFIED ON WORK ORDER. IF OPTION 2 IS NOT SPECIFIED, CONNECT VT WIRE #A1 FROM TERM 3 ON SUBBASE TO TERM 14 ON ALARM RELAY
9. OPTION 2: ALARM BELL, SILENCING SWITCH, & SILENCING RELAY CAN BE USED WITH OPTION 1 WHEN SPECIFIED ON THE WORK ORDER. IGNORE OPTION 1 IF IT IS NOT SPECIFIED.
10. IF 106695-01 IS ORDERED INSTALL WIRES ON TERMINALS 22, 23, R-, R+ OF RWF55 AS SHOWN
11. ENABLE/DISABLE RELAY COIL CAN BE 24VDC, 24VAC, OR 120VAC. USE WHICHEVER IS SPECIFIED ON THE WORK ORDER.
12. IF THE POC OPTION IS NOT USED, INSTALL A JUMPER WIRE FROM TERMINAL 4 TO TERMINAL 20 ON THE HONEYWELL FLAME SAFEGUARD WIRING SUBBASE.
13. IF THE LFP OPTION IS NOT USED, JUMPER TERMINAL 5 TO TERMINAL 18 ON THE HONEYWELL FLAME SAFEGUARD WIRING SUBBASE.
14. ALL SHIELDED MODBUS WIRES ARE ONLY GROUNDED AT THE RS485 MASTER (SOURCE).

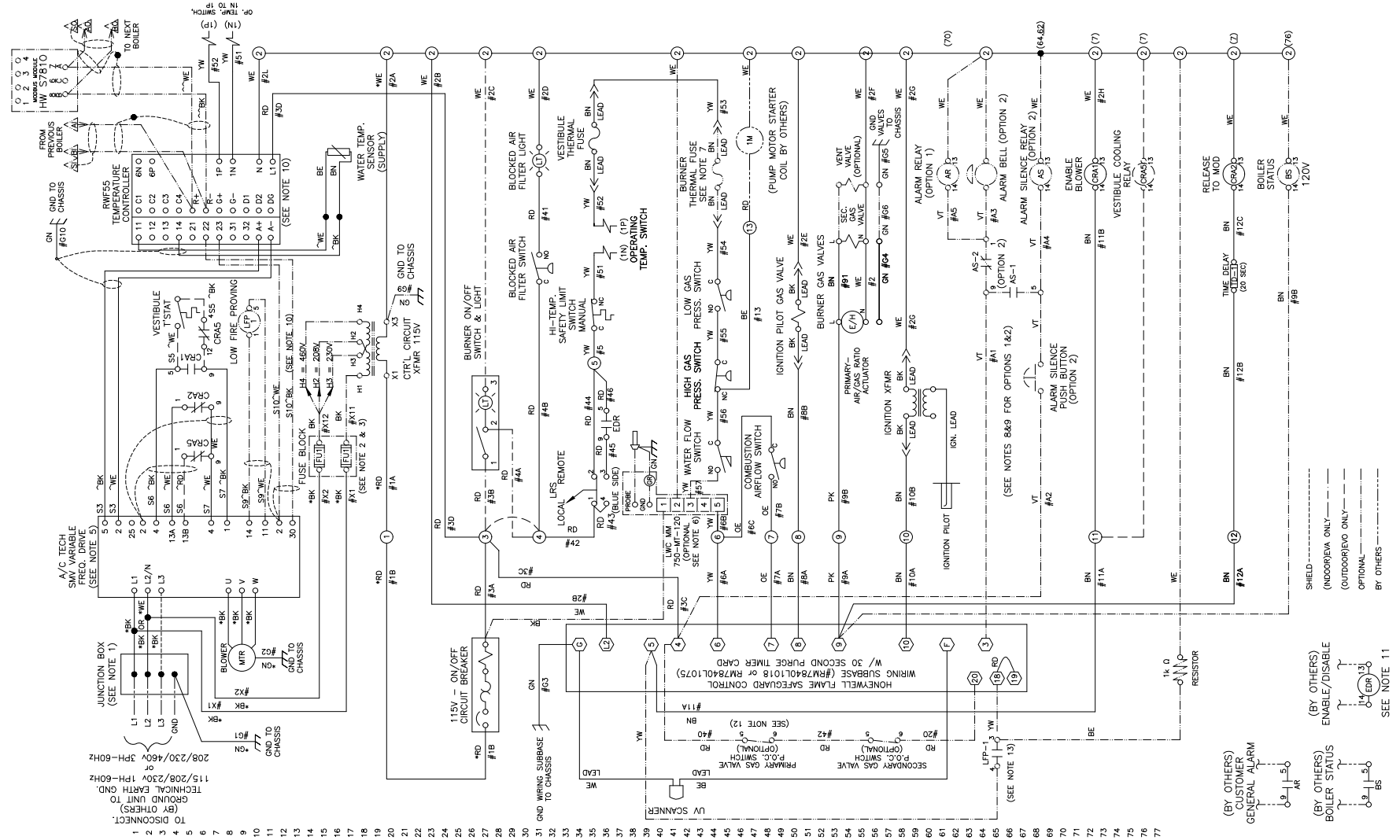

WIRE, 18 AWG:
BE = BLUE
BK = BLACK
BN = BROWN
GN = GREEN
OE = ORANGE
PK = PINK
RD = RED
VT = VIOLET
WE = WHITE
YW = YELLOW

WIRE, 12 AWG:
*BK = BLACK
*GN = GREEN
*WE = WHITE
*RD = RED

RELAY/SWITCH TERMINALS:
C = COMMON
NC = NORM. CLOSED
NO = NORM. OPEN

^ OR ^^ = SHIELDED CABLE

(#) CONTROL PANEL TERMINAL STRIP

WIRE JUNCTION W/ SPRING CAGE CONNECTOR (PN 81368915)

AR = ALARM RELAY SPDT

AS = ALARM SILENCE RELAY SPDT

REV: 20	EN: 34-1596	DATE: 01/22/21	DWN: GLK	CHKD: RCJ	APPD:	APPD:
MOVED VFD SHIELDS FROM TERMINAL 4 TO TERMINAL 2						

REFERENCE ASME Y14.5M-1994 FOR GEOMETRIC TOLERANCES. ALL DIMENSIONS IN INCHES. DRAWING NOT TO BE SCALED. NON-BASIC DIMENSIONAL AND ANGULAR TOLERANCES UNLESS OTHERWISE NOTED:
DECIMALS: X.X - ±0.1, X.XX - ±0.03, X.XXX - ±0.005. FRACTIONAL: ±1/32. ANGULAR: ±1°

THIS DOCUMENT CONTAINS CONFIDENTIAL INFORMATION WHICH IS THE PROPERTY OF THERMAL SOLUTIONS LLC. THIS DOCUMENT MAY NOT BE REPRODUCED, TRANSFERRED OR USED, OR ITS CONTENTS DISCLOSED, WITHOUT THE WRITTEN PERMISSION OF THE OWNER.

SUPERCEDES:

PROPERTY OF
Thermal Solutions Products LLC
LANCASTER, PA 17604-3244

TITLE
WIRING, MOD, EVA SIZE 1 & 2
115/208/230/460-1/3PH-60HZ
LOW FIRE PROVING(LFP)/IRI-POC; LRS FOR ENABLE DISABLE

DRAWING NUMBER	SCALE	DWG SIZE	SHEET
34-1155-C	NONE	C	1 OF 1